EPS1002 ELECTRONIC PRESSURE SENSOR SPECIFICATIONS

Pressure Range 0 – 3,000 p.s.i. | Power Supply 14 – 36v DC

Over Pressure Safety 6,000 p.s.i. | Maximum Load R_A R_A > 5 kOhm

Burst Pressure 7,977 p.s.i. | Accuracy (% of span) < 0.4 (BFSL)

Wetted Parts Material Stainless Steel | Material Temperature -40 – +257º F.

Ambient Temperature -40 – +212º F.

Signal Output 0 – 10 V, 3-wire | Response Time (10 … 90%) < 2 ms

Connector M12 x 1, 4-pin (Micro style) | Weight Approx. 70g

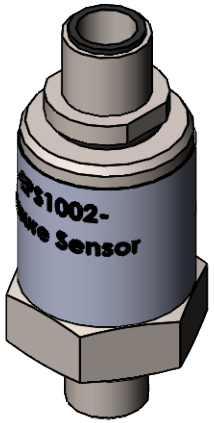

3D Model Available

CABLE OPTIONS
Both are DC Micro style (four-pin type) with 5 meter long PVC cord
#1850 cord has a straight connector
#1851 cord has a 90 degree connector

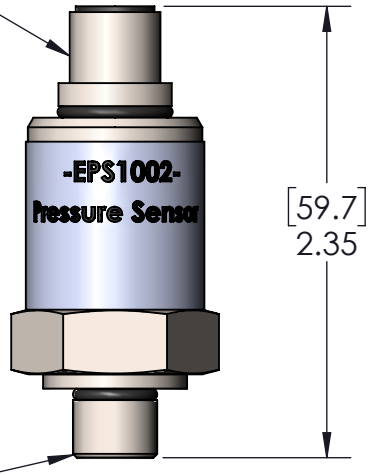

#4 SAE pressure inlet (to use with 1/8 NPT female port, use #3993 adaptor)

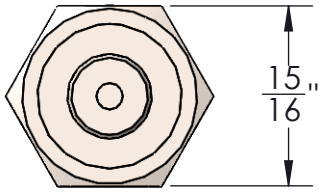

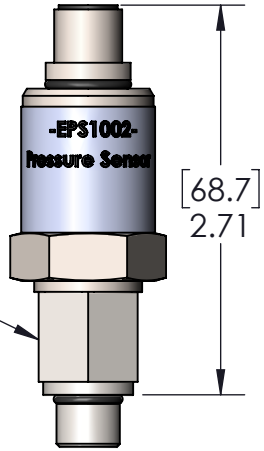

8106 adapter fitting may be required on dispense valves

If ordering a replacement sensor for a G.P. Reeves Dispense Valve (model KA2973_-EPS, or KA3239_-EPS) built prior to January 2016, then the adapter fitting may be needed

Electrical

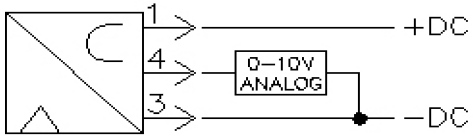

View of male pin connector

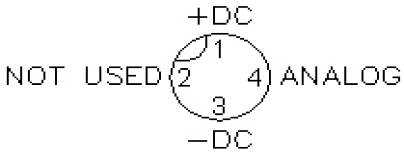

EPS1002:
Designed & engineered for use with grease. Has #4 SAE male pressure inlet. Includes Micro connector for quick electrical connections. This sensor requires an analog input to the user's PLC.

SALES DRAWING			G. P. REEVES INC.
PROPRIETARY AND CONFIDENTIAL THE INFORMATION CONTAINED IN THIS DRAWING IS THE SOLE PROPERTY OF G. P. REEVES INC. ANY REPRODUCTION IN PART OR AS A WHOLE WITHOUT THE WRITTEN PERMISSION OF G. P. REEVES INC. IS PROHIBITED.			DESCRIPTION: Electronic Pressure Sensor Analog
DIMENSIONS: INCHES UNLESS NOTED			SIZE A / DWG. NO. EPS1002 / REV
	NAME	DATE	
MODELED	ACL	4/14/15	
DETAILED	ACL	4/14/15	SCALE: 1:1 / WEIGHT: / SHEET 2 OF 3

Last updated: 10/13/2018